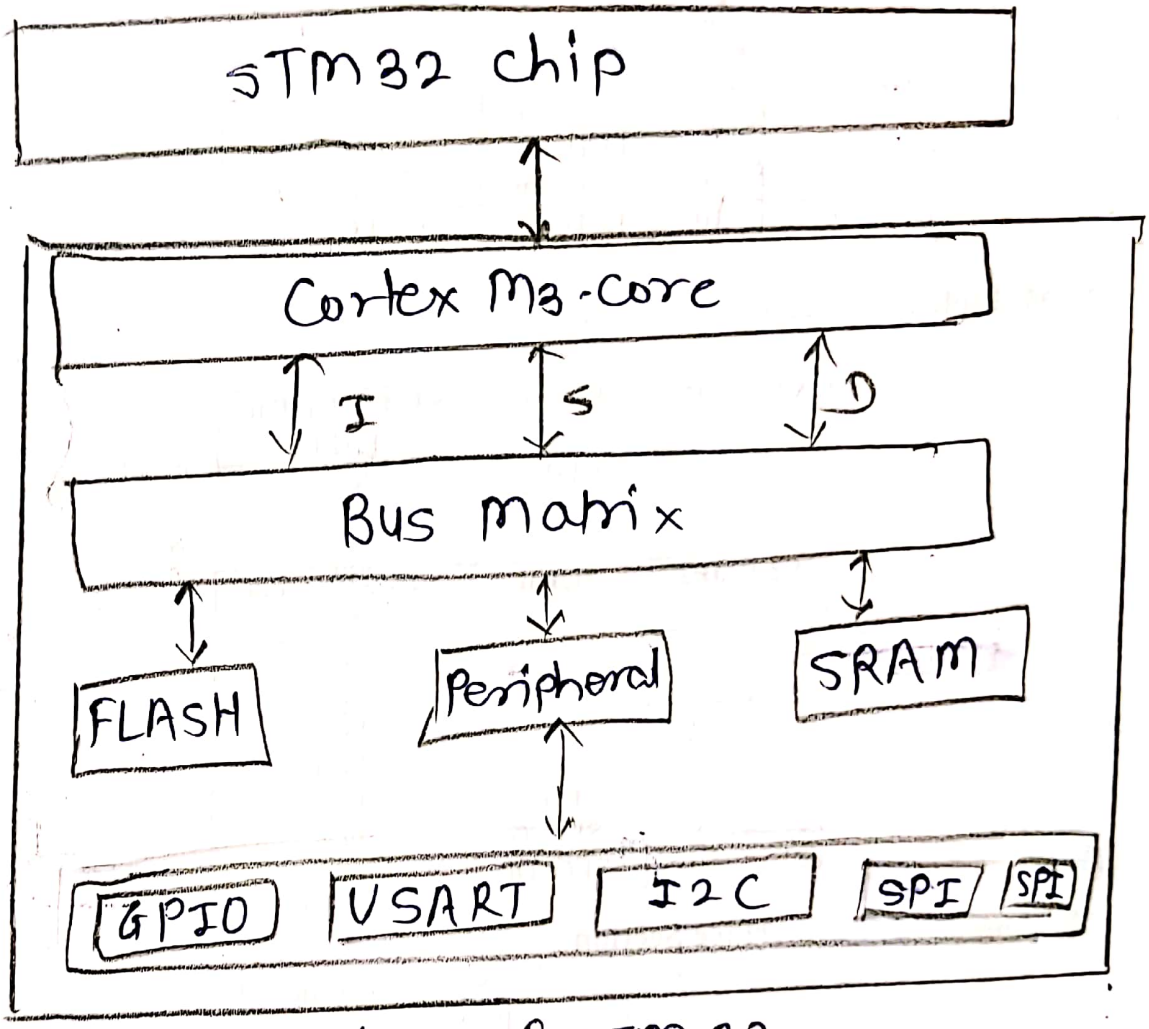

fig. Architecture of STM 32.

Scanned with OKEN Scanner

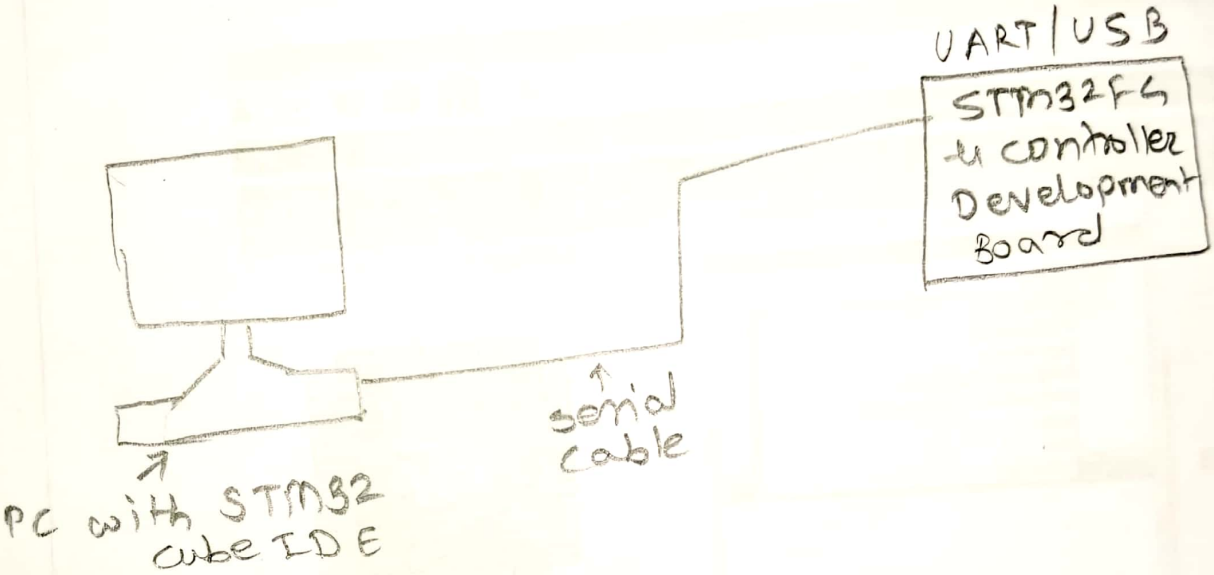

Scanned with OKEN Scanner

Pull Up.

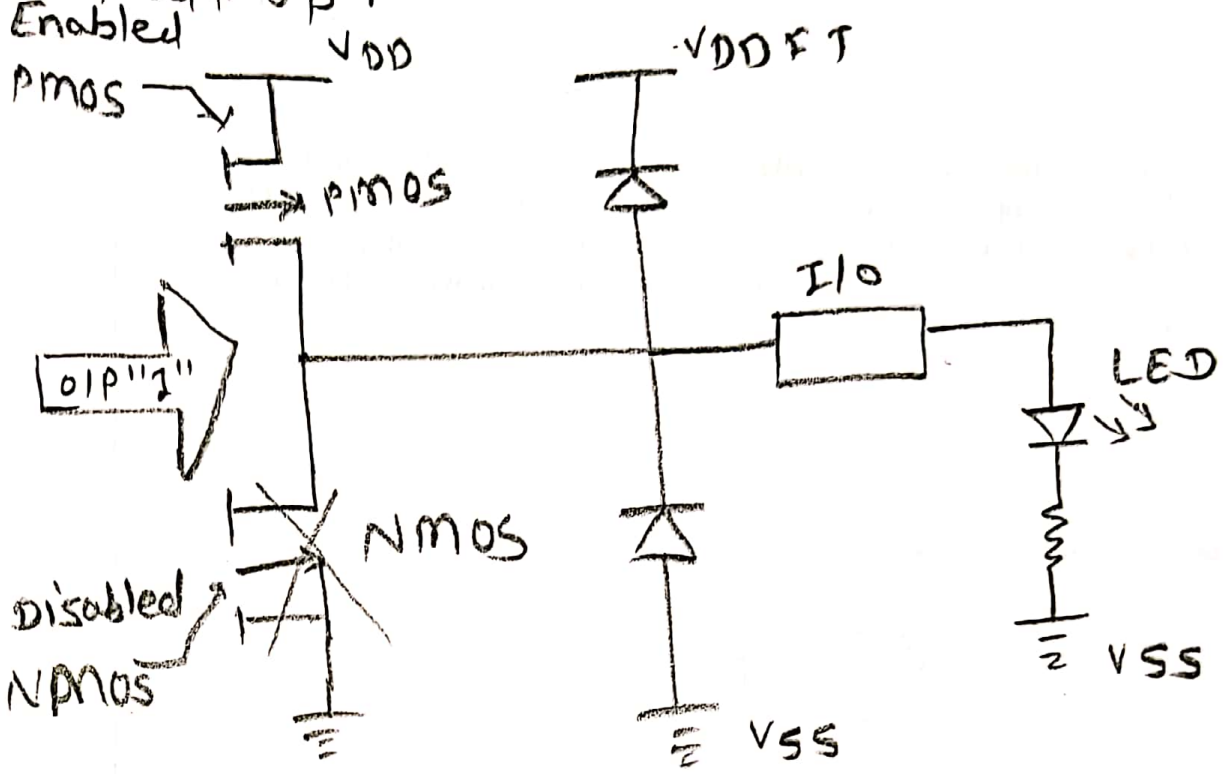

fig. PULLUP.

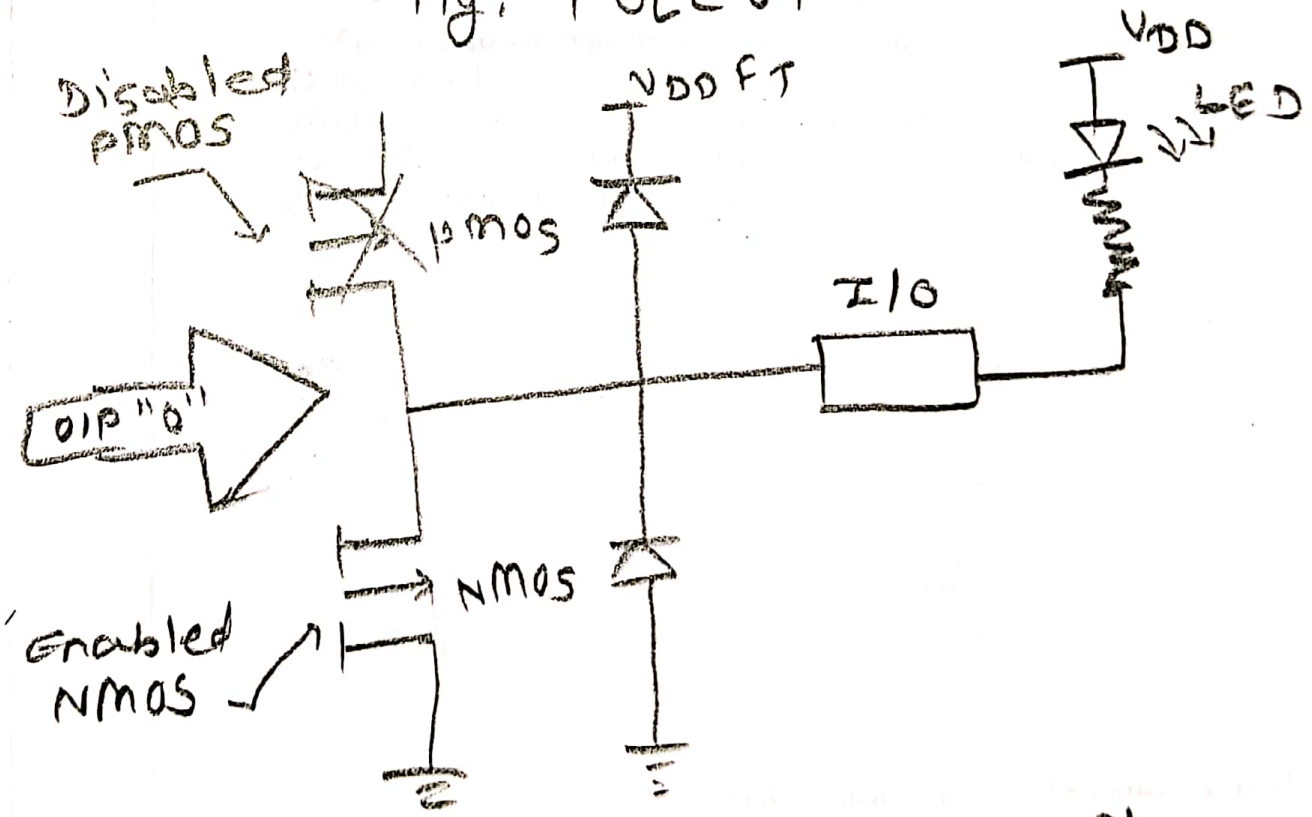

fig. PULL DOWN

Scanned with OKEN Scanner

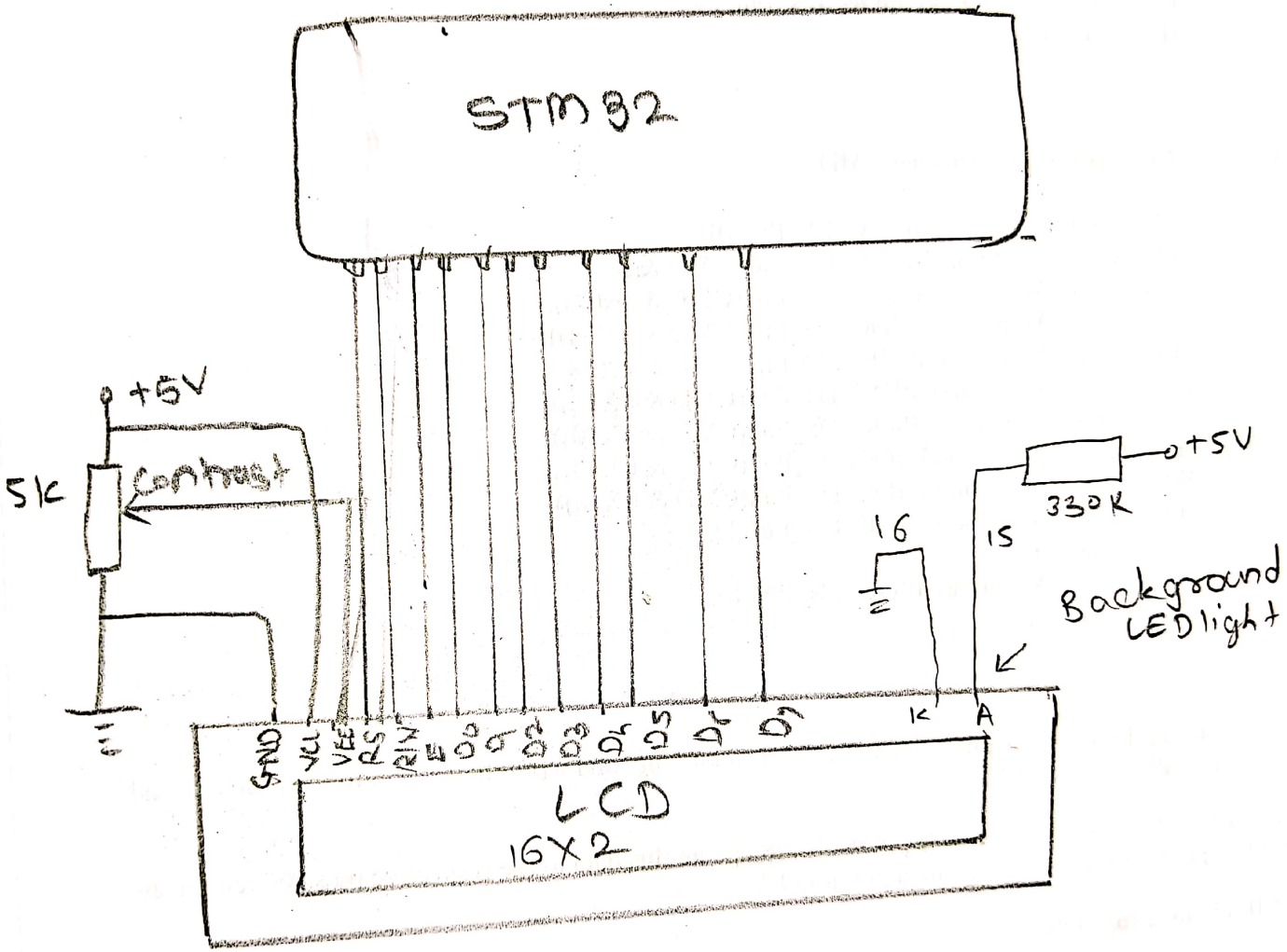

Scanned with OKEN Scanner

STM2 Timer Mode:

$$T_{out} = TicksCount \times TickTime$$

$$T_{out} = \frac{PSC \times Preload}{F_{CLK}}.$$

Scanned with OKEN Scanner

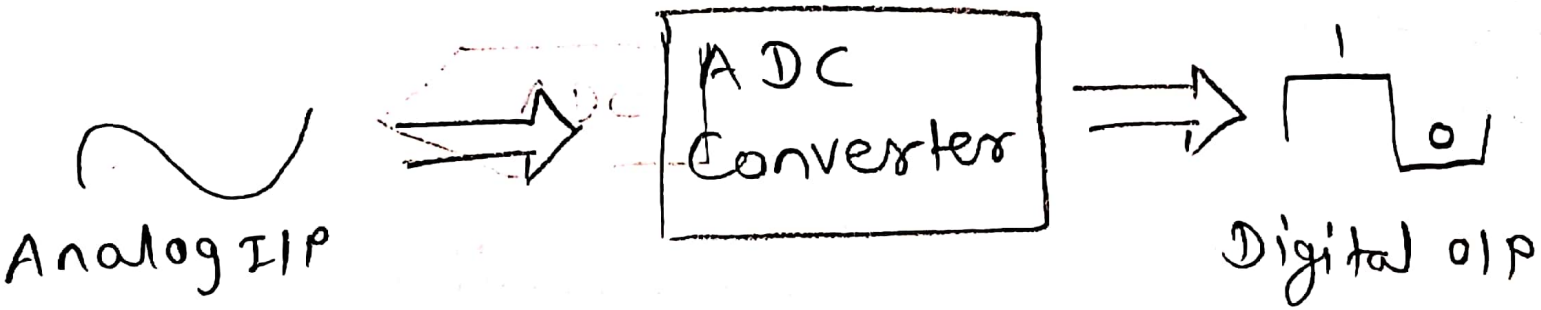

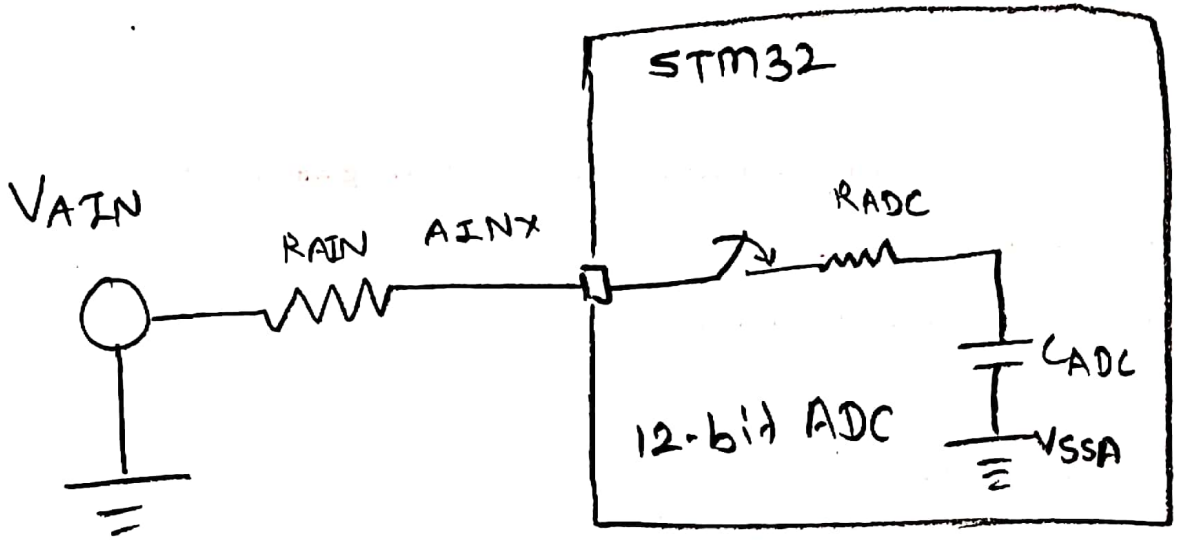

fig. STM32 ADC.

Scanned with OKEN Scanner

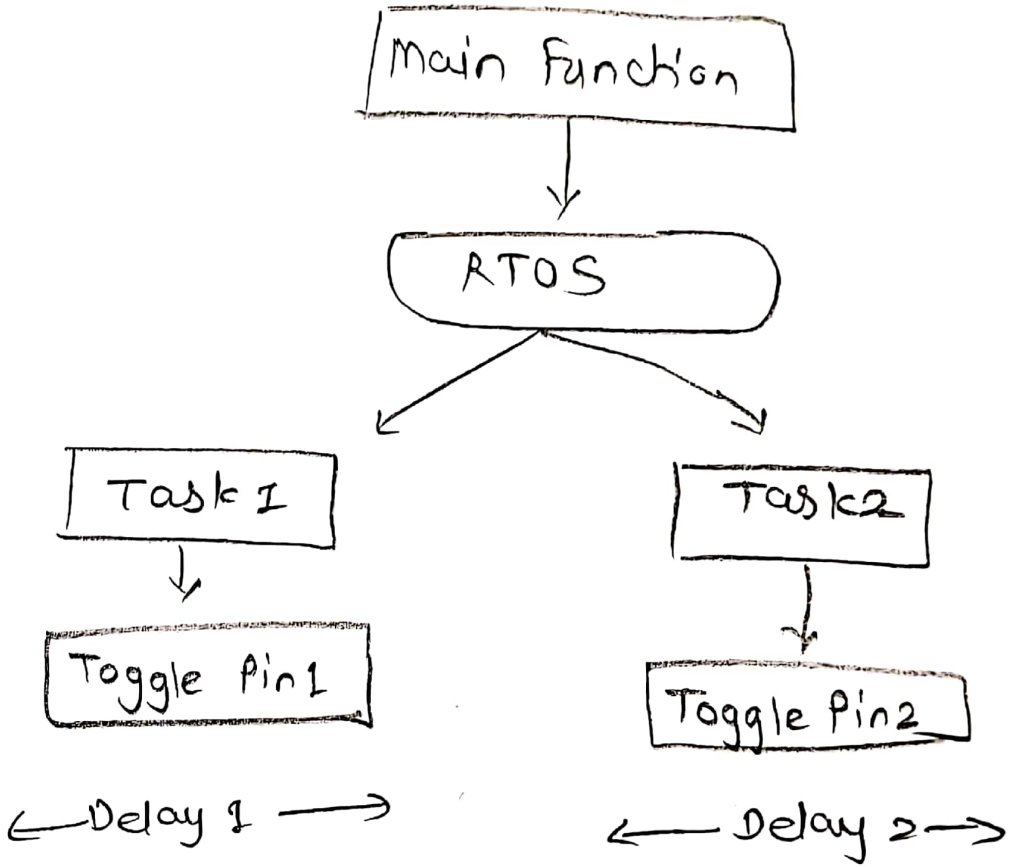

fig. STM32 Free RTOS

Scanned with OKEN Scanner